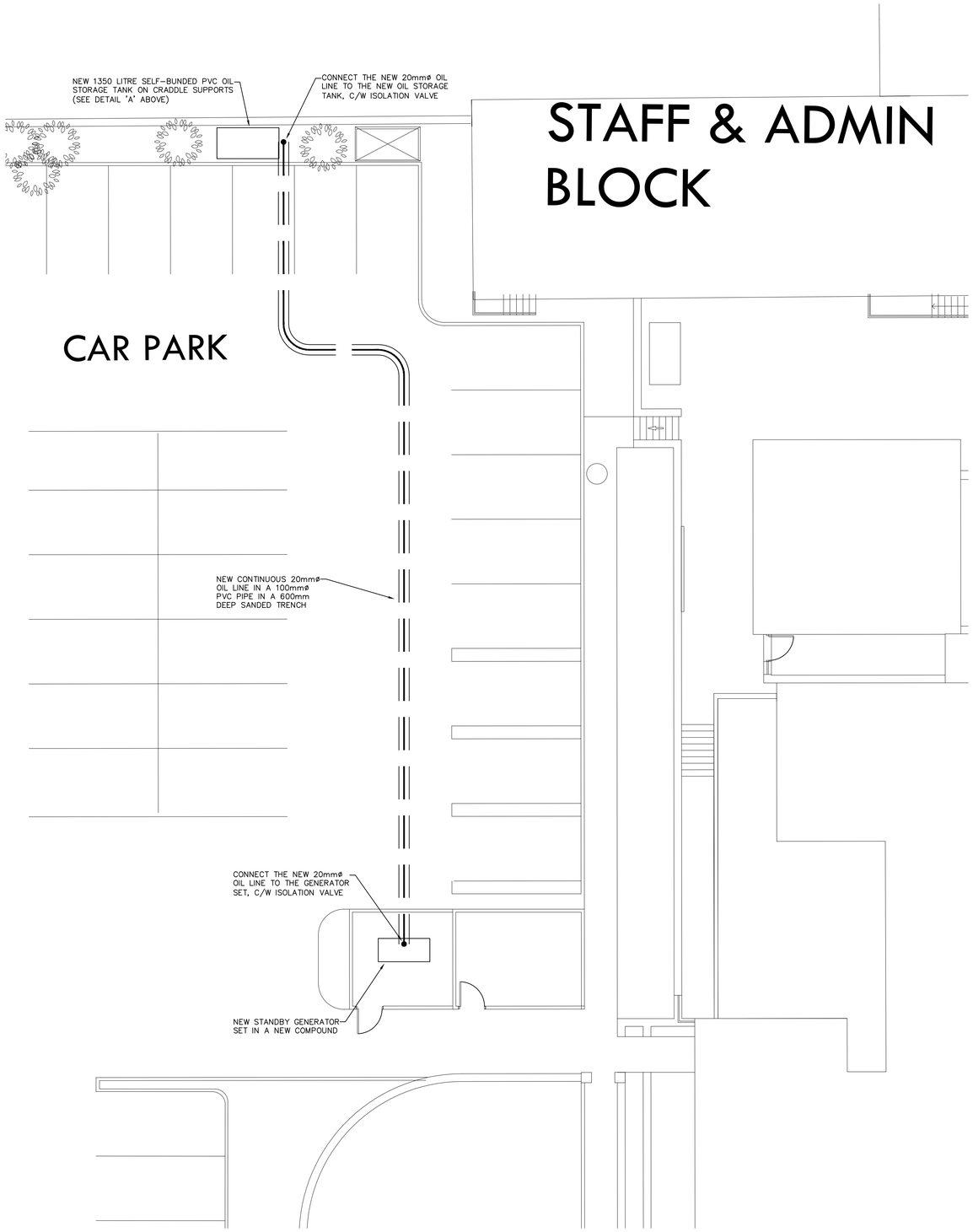

1 | 1:100 | PART SITE PLAN

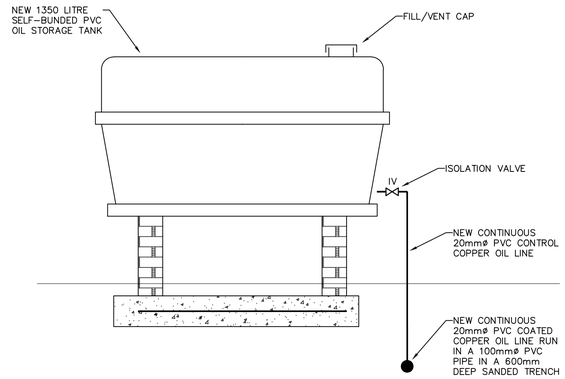

2 | 1:25 | DETAIL A – OIL STORAGE TANK

NOTES

1. THE CONTRACTOR SHALL SATISFY HIMSELF AS TO THE EXTENT AND THE EXACT LOCATION OF THE EXISTING UNDERGROUND SERVICES ON SITE
2. THIS DRAWING SHALL BE READ IN CONJUNCTION WITH AND CO–ORDINATED WITH THE RELEVANT ARCHITECTS & STRUCTURAL ENGINEERS DRAWINGS AND DETAILS ETC.
3. TRENCHES SHALL BE A MINIMUM OF 600mm DEEP. THE CONTRACTOR SHALL PROVIDE A MIN 150mm BED OF SAND IN THE TRENCH & SHALL COVER PIPES AND CABLES WITH A MIN OF 150mm LAYER OF SAND AND SHALL BACKFILL ALL TRENCHES AND MAKE GOOD ON COMPLETION OF THE WORKS.
4. THE CONTRACTOR SHALL AGREE THE EXACT ROUTES OF ALL THE INCOMING PVC DUCTS AND TRENCHES ETC FOR THE VARIOUS UTILITIES WITH THE RELEVANT AUTHORITIES (ie: ESB NETWORKS) BEFORE COMMENCING WORKS ON SITE.

REV.	BY:	DATE:	DESCRIPTION:
-	-	- - - - -	-

VOLUME A.3.3.1

TENDER

PROJECT:
GRETB OFFICES, ATHENRY, Co GALWAY - PROVISION OF A GENERATOR FACILITY

TITLE:
LAYOUT OF MECHANICAL SERVICES
- SITE AND DETAILS

HEAVEY KENNY ASSOCIATES
CONSULTING ENGINEERS
Mechanical and Electrical Building Services
6 Liosban Business Park, 23E First Floor,
Tuam Road, Galway Tel: (091) 566004/565184
E-mail: admin@heaveykennyassociates.ie
Website: www.heaveykennyassociates.ie
~ Celebrating 25 Years ~

HEAVEY KENNY ASSOCIATES SHALL HAVE NO RESPONSIBILITY FOR ANY USE MADE OF THIS DOCUMENT OTHER THAN FOR THAT WHICH IT WAS PREPARED AND ISSUED. ALL DIMENSIONS SHOULD BE CHECKED ON SITE. DO NOT SCALE FROM THIS DRAWING. ANY DRAWING ERRORS OR DIVERGENCES SHOULD BE BROUGHT TO THE ATTENTION OF HEAVEY KENNY ASSOCIATES AT THE ADDRESS ABOVE.

DESIGNED: AJ
DRAWN BY: LP
DATE: AUGUST 2026
SCALE: AS SHOWN

ARCH:

CHECKED BY:

DRG.No. 6941/M50/01

REV. -