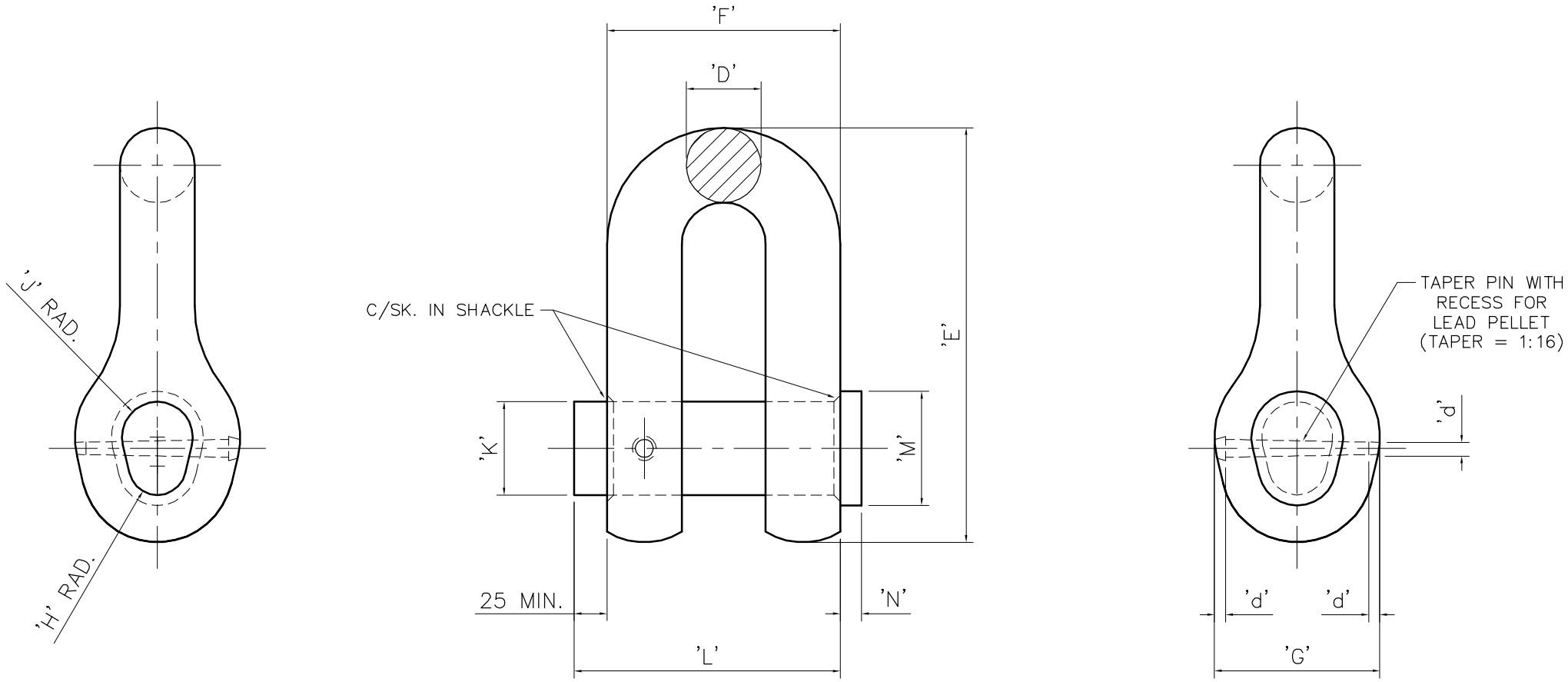

CLENCHING JOINING SHACKLE
SCALE = N.T.S.

CLENCHING JOINING SHACKLE											CHAIN SIZE
SHACKLE						BOLT					
'D'	'E'	'F'	'G'	'H'	'J'	'K'	'L'	'M'	'N'	'd'	
50	270	152	106	19	23	60	178	76	16	9.5	38

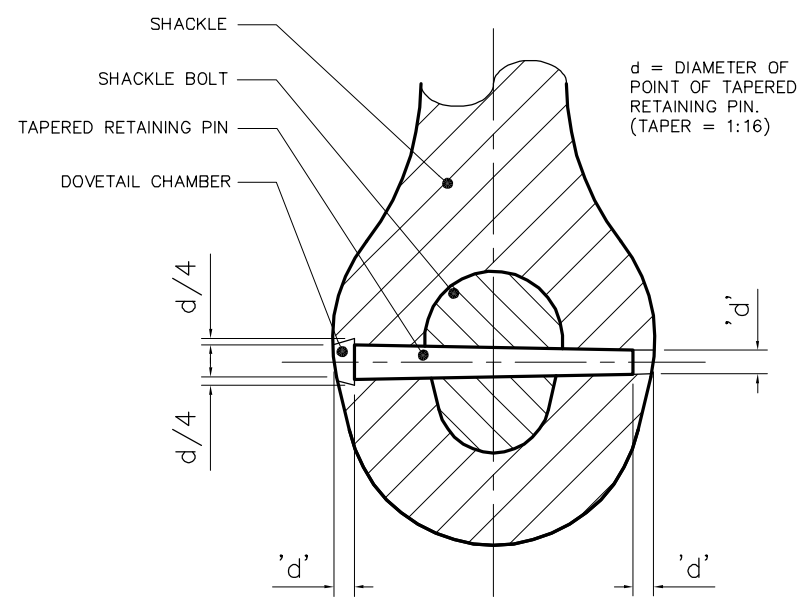

DETAIL OF TAPERED RETAINING PIN
SCALE = N.T.S.

DO NOT SCALE

THIS DRAWING UNLESS STAMPED IN RED ***"CONTROLLED DRAWING"*** WILL NOT BE UPDATED

THIS DRAWING IS THE PROPERTY OF THE CORPORATION OF TRINITY HOUSE. IT MUST NOT B LOANED, COPIED OR REPRODUCED WITHOUT THE WRITTEN PERMISSION OF THE CORPORATION.

GENERAL TOLERANCES EXCEPT WHERE STATED:

WHOLE NUMBERS	SEE NO
ONE DECIMAL PLACE	±0.25mm

ALL OTHER TOLERANCES ARE TO BE DEFINED.

NOTES

1. ASSOCIATED SPECIFICATION:

MOORING CHAIN SPECIFICATION NAVIGATI
BUOY MOORINGS TH SPECIFICATION No SC

2. TOLERANCING:

UNLESS OTHERWISE STATED
GENERAL TOLERANCE ±5%
MATERIAL DIAM = +2.5% -0

DRN: J.A.C.	CHKD: PRB	APPVD: RV
A	17/07/13	SPECIFICATION NOTE AMENDED IN ACCORDANCE WITH HD 774.
REV	DATE	DETAILS

Trinity House

OPERATIONS DIRECTORATE
HARWICH, ESSEX

BUOY MOORING DETAIL
BUOYS

CLENCHING JOINING SHACKLE DETAILS

DRAWN BY: ITC	DATE: 15/11/01	SCALE: N.T.S
CHECKED: FGC	DRG. No. **YBD/2**	
APPROVED: CAM		
19 Jul 2016 16:08	SHEET 2 OF 2	REV. A