A3

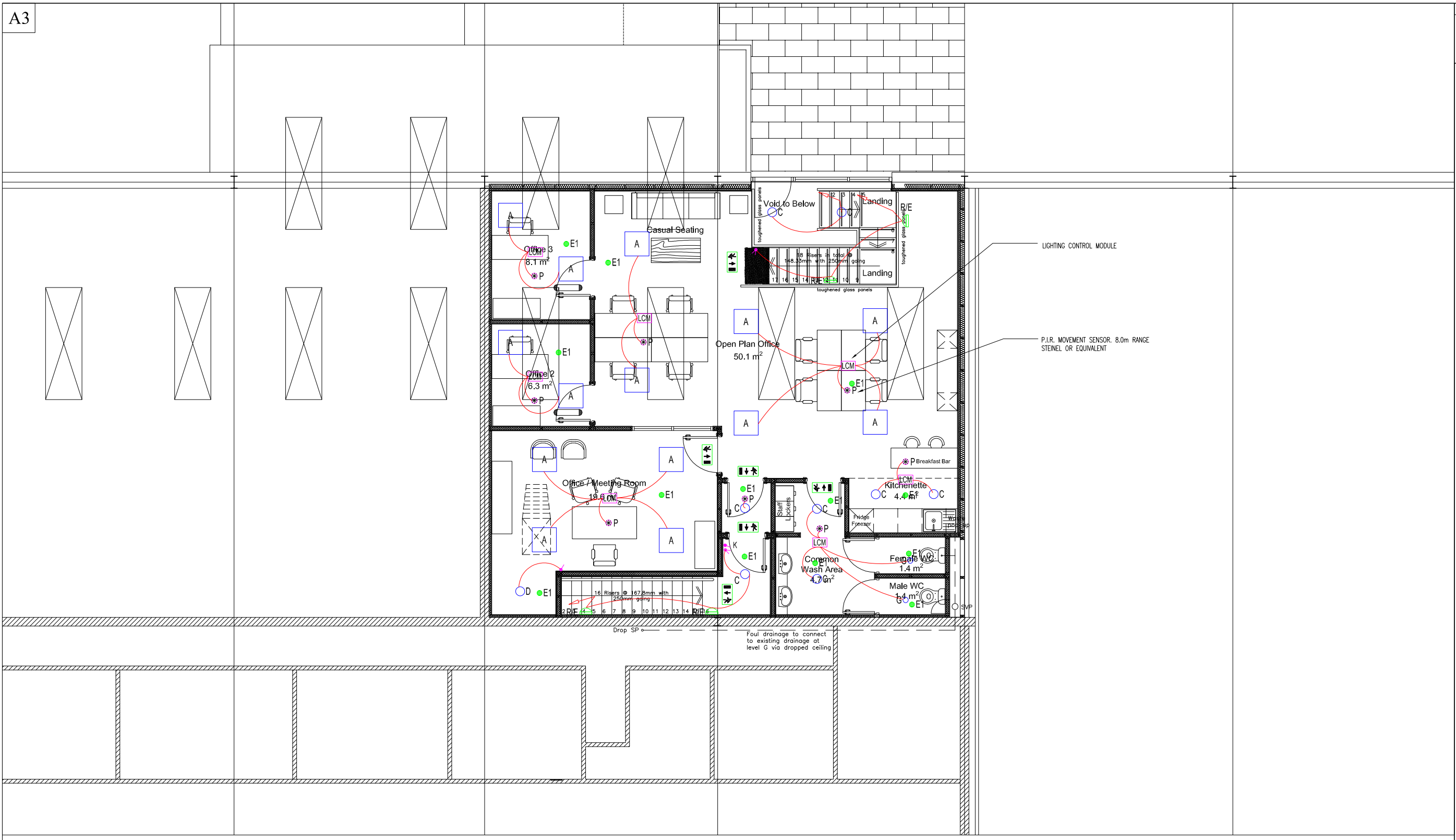

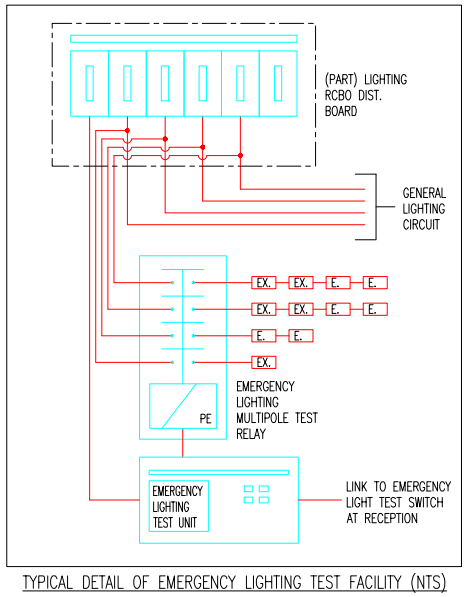

TYPICAL DETAIL OF EMERGENCY LIGHTING TEST FACILITY (NTS)

NOTES:

1. THIS DRAWING SHALL BE READ IN CONJUNCTION WITH ALL MECHANICAL, ELECTRICAL, ARCHITECTURAL AND STRUCTURAL DRAWINGS & SPECIFICATIONS.
2. THE ELECTRICAL CONTRACTOR SHALL CO-ORDINATE ALL SERVICES FULLY WITH ALL TRADES BEFORE COMMENCING WORK.
3. DO NOT SCALE THIS DRAWING. ALL DIMENSIONS SHALL BE TAKEN ON SITE.
4. THE ELECTRICAL CONTRACTOR SHALL BE RESPONSIBLE FOR PROVIDING ALL NECESSARY INFORMATION TO ALLOW PROPER CO-ORDINATION OF ALL SERVICES.
5. EXTRA COSTS INCURRED DUE TO THE CO-ORDINATION EXERCISE NOT BEING COMPLETED WILL NOT BE ACCEPTED BY THE ENGINEER.
6. EXACT LOCATION OF ALL SERVICES SHALL BE AGREED WITH THE EMPLOYERS REPRESENTATIVE PRIOR TO COMMENCEMENT ON SITE.
7. ALL SERVICES AS SHOWN ON THIS DRAWING SHALL BE INCLUDED IN THE FINAL TENDER PRICE.
8. SAMPLE OF ALL EQUIPMENT SHALL BE APPROVED BY CLIENT, ARCHITECT AND BUILDING SERVICES ENGINEER PRIOR TO ORDERING.
9. ALL DIMENSIONS IN MILLIMETRES UNLESS STATED OTHERWISE.

GENERAL LIGHTING NOTES:

1. ELECTRICAL INSTALLATION SHALL BE INSTALLED & CERTIFIED IN ACCORDANCE WITH I.S. 10101: 2020 NATIONAL RULES FOR ELECTRICAL INSTALLATIONS.
2. NEW LIGHT SWITCHES SHALL FINISH FLUSH (EXCLUDING PLANTROOM AREAS) C/W RECESSED GALVANISED STEEL BACKBOXES, GALVANISED STEEL CONDUITS TO SAME SHALL BE RECESSED IN STUD PARTITIONS/DRY LINING OR CHASED INTO MASONRY WALLS IF NECESSARY – LIAISE WITH MAIN CONTRACTOR. INTUMESCENT FIRE PADS TO BE FIXED TO THE REAR OF BACK BOXES RECESSED IN STUD PARTITIONS. THE INTEGRITY OF THE FIRE RATED PARTITIONS MUST BE MAINTAINED.
3. SURFACE MOUNTED LIGHT SWITCHES IN PLANTROOM AREAS AND WHERE AGREED BY THE DESIGN TEAM SHALL HAVE METALCLAD FINISH. SURFACE MOUNTED LIGHT SWITCHES MUST BE AGREED WITH THE DESIGN TEAM PRIOR TO COMMENCING WORKS.
4. ALL LIGHTING LAYOUTS IN ROOMS SHALL BE REVIEWED ON SITE WITH EMPLOYERS REPRESENTATIVE PRIOR TO INSTALLATION.
5. THE CONTRACTOR SHALL ALLOW FOR COMMISSIONING THE LIGHTING CONTROLS WITH THE LIGHTING SUPPLIER AS PER SPECIFICATION. LUX LEVELS AND LIGHTING CONTROLS STRATEGY AS HIGHLIGHTED IN THE SPECIFICATIONS.
6. THE ELECTRICAL CONTRACTOR SHALL ALLOW FOR SUPPLYING AND INSTALLING 2-CORE LOW VOLTAGE CABLES BETWEEN LIGHT FITTINGS ON THE SAME LIGHTING CIRCUIT FOR LIGHTING CONTROL.
7. FACADE LIGHTING CIRCUITS ARE TO BE CONTROLLED BY PHOTOCELL, TIME CLOCK AND KEY OPERATED HAND-OFF-AUTO SWITCHES.
8. THE SECURITY SYSTEM SHALL BE LINKED TO THE FACADE LIGHTING. ACTIVATION OF INTRUDER ALARM SHALL SWITCH ON EXTERNAL LIGHTS ON BUILDING FACADE DURING HOURS OF DARKNESS.
9. ALLOW FOR FITTING GALVANISED MESH CAGES TO FACADE LIGHT FITTINGS. ALL SHALL BE SUPPLIED AND FITTED BY THE ELECTRICAL CONTRACTOR.
10. THE LIGHTING INSTALLATION IS NOT TO BE USED FOR WORKING ILLUMINANCE DURING THE CONSTRUCTION PERIOD.
11. PROTECTIVE COVERING IS TO REMAIN ON ALL LUMINARES UNTIL IMMEDIATELY PRIOR TO HAND OVER.
12. ALL CIRCUITS SHALL BE PROTECTED BY AN RCBO.
13. THERE SHALL BE A MAXIMUM OF 10No. FITTINGS PER CIRCUIT WITH EACH CIRCUIT PROTECTED BY AN RCBO.
14. SUB-CIRCUIT CABLING SHALL GENERALLY BE NYM-J/LSF CARRIED IN GALVANISED STEEL CONTAINMENT THROUGHOUT. PRIMARY CONTAINMENT SHALL GENERALLY BE SUITABLY SIZED GALVANISED STEEL CABLE TRAY. SECONDARY CONTAINMENT SHALL GENERALLY BE 25Ø GALVANISED STEEL CONDUIT UNLESS INDICATED OTHERWISE.
15. THE ELECTRICAL CONTRACTOR SHALL ENSURE THAT THE CIRCUITS ARE DISTRIBUTED EVENLY OVER THE PHASES.
16. ANY SINGLE PHASE CIRCUIT FED DIRECTLY FROM A THREE PHASE DISTRIBUTION BOARD SHALL HAVE THE APPROPRIATE PHASE COLOUR EXTENDED INTO THE SINGLE PHASE CIRCUITS FED FROM THAT PHASE.
17. WHERE WIRING OF MORE THAN ONE PHASE ENTERS A SWITCH BOX, VERTICAL BARRIERS SHALL BE PROVIDED BETWEEN PHASES AND "RED" WARNING PLATES ENGRAVED "DANGER 380 VOLTS" SHALL BE PROVIDED BELOW THE COVER PLATE AND FIXED TO THE SWITCH.
18. ALL NEW LIGHT SWITCHES SHALL BE TCD PART 'M' COMPLIANT. FRONT PLATES OF ALL SHALL BE VISUALLY CONTRASTING WITH BACKGROUND.

EMERGENCY LIGHTING NOTES:

1. EMERGENCY LIGHTING SHALL COMPLY WITH 2023 VERSION OF I.S. 3217
2. FINAL LOCATIONS OF EMERGENCY LIGHTING TO COMPLY WITH FIRE CERTIFICATE.
3. EMERGENCY LIGHTING TO BE CO-ORDINATED WITH SAFETY SIGNS AND FIRST AID WHICH ARE SUBJECT TO STATUTORY REQUIREMENT.
4. HANDOVER DRAWINGS AND DOCUMENTS SHALL BE PRODUCED IN ACCORDANCE WITH CLAUSES 6.1, 6.2 AND 6.3 IF I.S. EN 50172.
5. EMERGENCY LIGHTING TEST UNIT TO BE INSTALLED ON ALL ELECTRICAL BOARDS. SEE SPECIFICATION FOR FURTHER DETAILS.
6. ALL EMERGENCY LIGHT FITTINGS, EXIT SIGNS ETC SHALL BE WIRED VIA INTERFACE UNITS AND CONTROLLED BY CENTRAL TEST UNIT ON RESPECTIVE DB.

GENERAL NOTES

1) Do not scale services equipment from this drawing.
2) All dimensions should be checked on site.
3) Any drawing errors or divergences should be brought to the attention of Geaney Engineering Consultants at the address shown below.
4) Drawing to be read in conjunction with all other drawings and documentation.

GENERAL & EMERGENCY LIGHTING LEGEND:

- LIGHT SWITCH, ONE WAY
- LIGHT SWITCH, TWO WAY
- P — P.I.R. MOVEMENT SENSOR. 8.0m RANGE STEINEL OR EQUIVALENT
- D1 — DAYLIGHT DIMMING & P.I.R. MOVEMENT SENSOR. 8.0m RANGE STEINEL OR EQUIVALENT
- LCM — LIGHTING CONTROL MODULE
- A — 600x600 RECESSED 29W LED LUMINAIRE C/W DIGITAL DIMMABLE CONTROL GEAR – DISANO 834 HE OR EQUIVALENT
- B — 600x600 RECESSED 22W LED LUMINAIRE DISANO 834 SPC OR EQUIVALENT
- C — 18W LED RECESSED DOWNLIGHTER WITH POLYCARBONATE COVER FOSNOVA ENERGY 2245 OR EQUIVALENT
- CWP — 24W LED RECESSED DOWNLIGHTER WITH POLYCARBONATE COVER – IP65 RATED FOSNOVA JET 140 OR EQUIVALENT
- D — 25W LED RECESSED DOWNLIGHTER WITH POLYCARBONATE COVER FOSNOVA ENERGY 2245 OR EQUIVALENT
- DWP — 24W LED RECESSED DOWNLIGHTER WITH POLYCARBONATE COVER – IP65 RATED FOSNOVA JET 140 OR EQUIVALENT
- G — 9W LED RECESSED DOWNLIGHTER WITH POLYCARBONATE PRISMATIC LENS FOSNOVA FENIX 1 OR EQUIVALENT
- L — 9W LED RECESSED DOWNLIGHTER WITH CLEAR GLASS PANEL FOSNOVA MARTE 12 OR EQUIVALENT
- S — 16W LED SURFACE MOUNTED LUMINAIRE DISANO OBLO J OR EQUIVALENT
- R/E — 14W LED WALL MOUNTED LUMINAIRE C/W EMERGENCY BATTERY PACK DISANO GLOBO OR EQUIVALENT
- E1 — RECESSED EMERGENCY LED, 170 LUMENS OUTPUT VENTILUX OPTILENS OR EQUIVALENT
- E2 — EMERGENCY LED, BULKHEAD TYPE, 170 LUMENS OUTPUT – IP65 RATED VENTILUX VISOR 120 OR EQUIVALENT
- E3 — LED TWIN SPOT EMERGENCY FITTING, 2x475 LUMENS OUTPUT – IP65 RATED. VENTILUX WTL LED 9 WATT OR EQUIVALENT
- MAINTAINED TYPE LED EXIT SIGN VENTILUX OR EQUIVALENT
- DS — MAINTAINED TYPE LED EXIT SIGN – DOUBLE SIDED VENTILUX OR EQUIVALENT

NOTES:

POWER POINTS AND CONTROLLERS FOR AIR CONDITIONING NOT INDICATED.

ALL 13A SWITCHED TWIN SOCKET OUTLETS SHALL BE C/W 2No. USB PORTS (EXCLUDING SOCKETS IN POWER MODULES AT ISLAND DESKS AND CLEANERS SOCKETS)

Revision	Description	Date	Drawn	Checked
1	Construction Issue	May 2026	RJM	CG
0	Construction Issue	April 2024	RJM	CG

GEANEY ENGINEERING CONSULTANTS

STUDIO 22,
WATERFORD BUSINESS PARK,
CORK ROAD,
WATERFORD,
IRELAND.

TEL: 051-879371
FAX: 051-853188
EMAIL: info@geaneyengineering.ie

project title:

Dunhill Eco Centre
Proposed Offices
Dunhill, Co. Waterford

drawing title:

General & Emergency Lighting Layout
First Floor

architect: The E Project Charted Architects

scale: 1:100 @ A3

drawing number: EL3

project number: 0595