A3

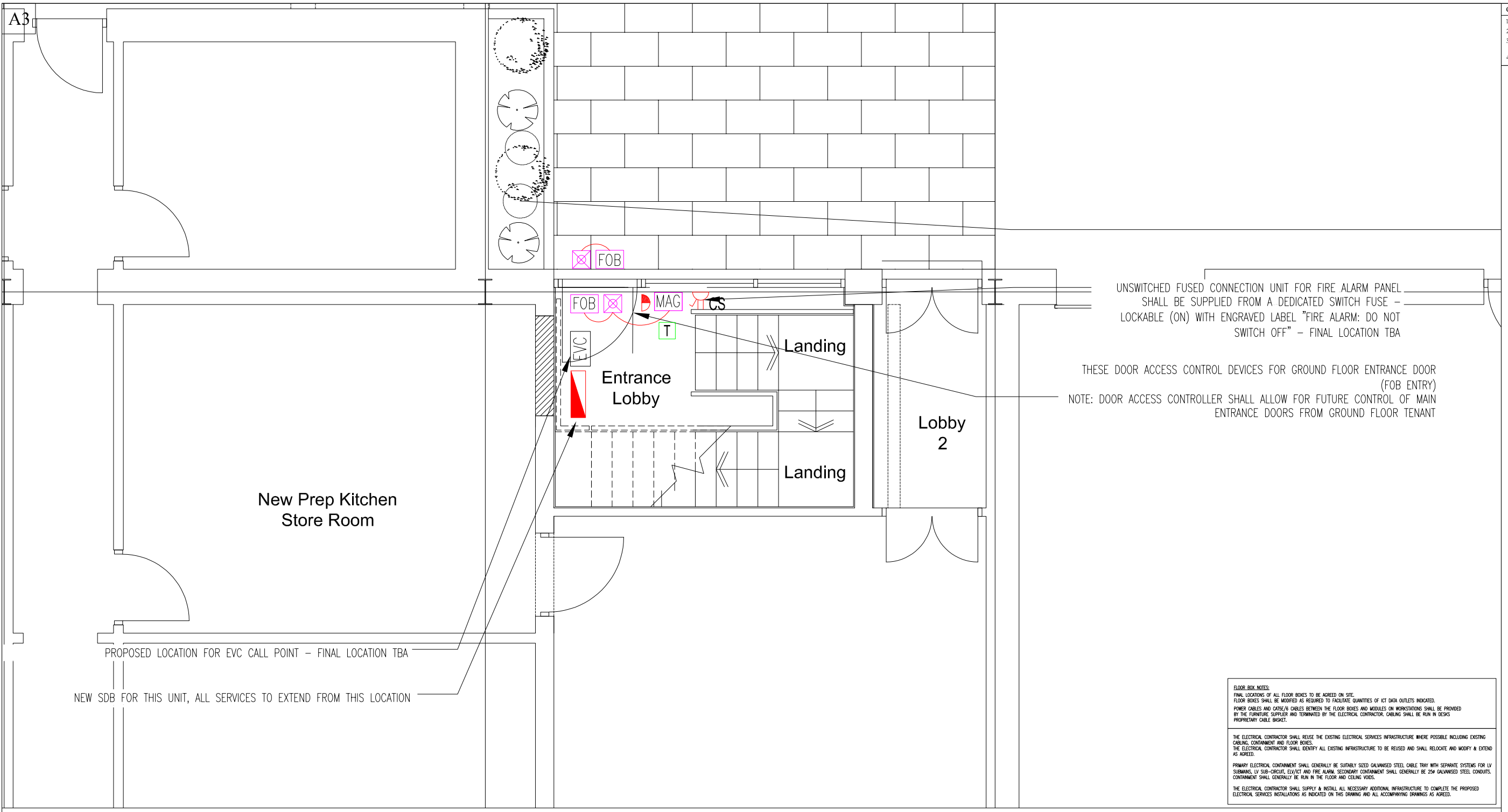

GENERAL NOTES

1) Do not scale services equipment from this drawing.
2) All dimensions should be checked on site.
3) Any drawing errors or divergences should be brought to the attention of Geaney Engineering Consultants at the address shown below.
4) Drawing to be read in conjunction with all other drawings and documentation.

GENERAL SERVICES & SMALL POWER LEGEND:

- POWER DISTRIBUTION BOARD
- PM — POWER MODULE WITH 2No. SWITCHED TWIN 13A DP SOCKET OUTLETS AND 2No. RJ45 CAT6A ICT NETWORK OUTLETS
- 13A SINGLE SOCKET OUTLET
- 13A DOUBLE POLE SWITCHED TWIN SOCKET OUTLET C/W 2No. USB PORTS
- CS — 13A DOUBLE POLE SWITCHED TWIN SOCKET OUTLET (CLEANERS SOCKET)
- SP&N INDUSTRIAL TYPE SOCKET OUTLET – RATING AS INDICATED, MK COMMANDO RANGE OR EQUIVALENT
- FUSED CONNECTION UNIT C/W NEON INDICATOR – "UNSWITCHED" TYPE
- DOUBLE POLE SWITCHED FUSED CONNECTION UNIT C/W NEON INDICATOR
- DOUBLE POLE SWITCH C/W NEON INDICATOR
- RJ45 ICT NETWORK OUTLET – CAT 6
- 2 — TWIN RJ45 ICT NETWORK OUTLET – CAT 6
- TV — RJ45 TV OUTLET – CAT 6 (WIRED BACK TO COMMS ROOM)
- WI-FI ACCESS POINT
- 3 COMPARTMENT DADO TRUNKING VERTICAL DROP
- 3 COMPARTMENT DADO TRUNKING
- AV — AV INPUTS FACEPLATE C/W FEMALE HDMI OUTLETS
- AIR CONDITIONING CONTROLLER
- EBC-X — ELECTRIC WINDOW BLINDS CONTROLLER
- EB — ELECTRIC WINDOW BLINDS POWER SUPPLY UNIT
- MSFD — MOTORISED SMOKE/FIRE DAMPER
- MSFD — MOTORISED SMOKE/FIRE DAMPER CONTROL PANEL
- ELECTRONIC FAN SPEED CONTROLLER
- EF — EXTRACT FAN
- 1.2kw ELECTRIC PANEL HEATER
- T — ROOM THERMOSTAT

EMERGENCY ASSISTANCE LEGEND:

- EAC — EMERGENCY ASSISTANCE ALARM SYSTEM CALL CONTROLLER
- EMERGENCY ASSISTANCE ALARM SYSTEM OVER DOOR LIGHT/ALARM
- EMERGENCY ASSISTANCE ALARM SYSTEM RESET POINT C/W REASSURANCE SOUNDER & LED
- EMERGENCY ASSISTANCE ALARM SYSTEM PULL-CHORD

DOOR ACCESS LEGEND:

- DOOR ACCESS FLUSH MOUNTED STAINLESS STEEL DOOR ENTRY PANEL WITH BUZZER BUTTON, MICROPHONE AND SPEAKER LINKED TO INTERNAL HANDSET
- IHS — DOOR ACCESS INTERNAL HANDSET WITH RELEASE BUTTON CONTROLLING MAIN ENTRANCE DOORS (& CARPARK BARRIER)
- MAG — DOOR ACCESS MAG LOCK
- FOB — DOOR ACCESS FOB READER
- DOOR ACCESS DOOR RELEASE BUTTON
- DOOR ACCESS EMERGENCY DOOR RELEASE BUTTON
- PSU — POWER SUPPLY UNIT FOR DOOR ACCESS CONTROLLER
- DAC — DOOR ACCESS CONTROLLER

EMERGENCY VOICE COMMUNICATION LEGEND:

- EVC — EMERGENCY VOICE COMMUNICATION SYSTEM CALL POINT STAINLESS STEEL HANDS FREE VANDAL RESISTANT
- EVM — EMERGENCY VOICE COMMUNICATION CENTRAL MONITORING STATION

FLOOR BOX NOTES:

FINAL LOCATIONS OF ALL FLOOR BOXES TO BE AGREED ON SITE.
FLOOR BOXES SHALL BE MODIFIED AS REQUIRED TO FACILITATE QUANTITIES OF ICT DATA OUTLETS INDICATED.

POWER CABLES AND CAT5E/6 CABLES BETWEEN THE FLOOR BOXES AND MODULES ON WORKSTATIONS SHALL BE PROVIDED BY THE FURNITURE SUPPLIER AND TERMINATED BY THE ELECTRICAL CONTRACTOR. CABLING SHALL BE RUN IN DESKS PROPRIETARY CABLE BASKET.

THE ELECTRICAL CONTRACTOR SHALL REUSE THE EXISTING ELECTRICAL SERVICES INFRASTRUCTURE WHERE POSSIBLE INCLUDING EXISTING CABLING, CONTAINMENT AND FLOOR BOXES.
THE ELECTRICAL CONTRACTOR SHALL IDENTIFY ALL EXISTING INFRASTRUCTURE TO BE REUSED AND SHALL RELOCATE AND MODIFY & EXTEND AS AGREED.

PRIMARY ELECTRICAL CONTAINMENT SHALL GENERALLY BE SUITABLY SIZED GALVANISED STEEL CABLE TRAY WITH SEPARATE SYSTEMS FOR LV SUBMAINS, LV SUB-CIRCUIT, ELV/ICT AND FIRE ALARM. SECONDARY CONTAINMENT SHALL GENERALLY BE 25ø GALVANISED STEEL CONDUITS. CONTAINMENT SHALL GENERALLY BE RUN IN THE FLOOR AND CEILING VOIDS.

THE ELECTRICAL CONTRACTOR SHALL SUPPLY & INSTALL ALL NECESSARY ADDITIONAL INFRASTRUCTURE TO COMPLETE THE PROPOSED ELECTRICAL SERVICES INSTALLATIONS AS INDICATED ON THIS DRAWING AND ALL ACCOMPANYING DRAWINGS AS AGREED.

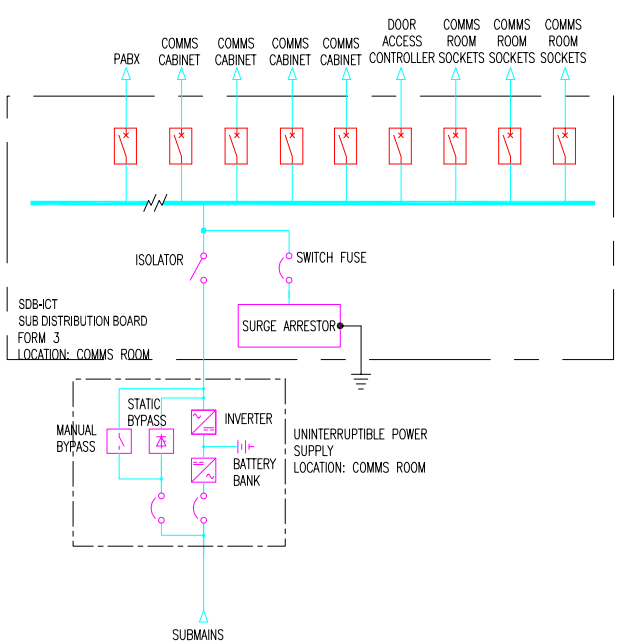

TYPICAL COMMS ROOM LV SCHEMATIC (NTS)

NOTES:

1. THIS DRAWING SHALL BE READ IN CONJUNCTION WITH ALL MECHANICAL, ELECTRICAL, ARCHITECTURAL AND STRUCTURAL DRAWINGS & SPECIFICATIONS.
2. THE ELECTRICAL CONTRACTOR SHALL CO-ORDINATE ALL SERVICES FULLY WITH ALL TRADES BEFORE COMMENCING WORK.
3. DO NOT SCALE THIS DRAWING. ALL DIMENSIONS SHALL BE TAKEN ON SITE.
4. THE ELECTRICAL CONTRACTOR SHALL BE RESPONSIBLE FOR PROVIDING ALL NECESSARY INFORMATION TO ALLOW PROPER CO-ORDINATION OF ALL SERVICES.
5. EXTRA COSTS INCURRED DUE TO THE CO-ORDINATION EXERCISE NOT BEING COMPLETED WILL NOT BE ACCEPTED BY THE ENGINEER.
6. EXACT LOCATION OF ALL SERVICES SHALL BE AGREED WITH THE EMPLOYERS REPRESENTATIVE PRIOR TO COMMENCEMENT ON SITE.
7. ALL SERVICES AS SHOWN ON THIS DRAWING SHALL BE INCLUDED IN THE FINAL TENDER PRICE.
8. SAMPLE OF ALL EQUIPMENT SHALL BE APPROVED BY CLIENT, ARCHITECT AND BUILDING SERVICES ENGINEER PRIOR TO ORDERING.
9. ALL DIMENSIONS IN MILLIMETRES UNLESS STATED OTHERWISE.

GENERAL SERVICES & SMALL POWER NOTES:

1. THE ELECTRICAL CONTRACTOR SHALL ALLOW FOR POWER SUPPLY & ELECTRICAL CONNECTION TO ALL MECHANICAL ITEMS.
2. THE ELECTRICAL CONTRACTOR SHALL ALLOW FOR FINAL CONNECTIONS TO ALL LOOSE EQUIPMENT & APPLIANCES.
3. EMERGENCY LIGHTING TEST UNIT TO BE INSTALLED ON ALL ELECTRICAL BOARDS. SEE SPECIFICATION FOR FURTHER DETAILS.
4. SURGE PROTECTION TO BE INSTALLED ON ALL DISTRIBUTION BOARDS. SEE SPECIFICATION FOR FURTHER DETAILS.
5. ELECTRICAL OUTLETS, CONNECTION UNITS, SWITCHES, DEVICES ETC. SHALL GENERALLY BE FLUSH MOUNTED C/W RECESSED GALVANISED STEEL BACKBOXES, GALVANISED STEEL CONDUITS TO SAME SHALL BE RECESSED IN STUD PARTITIONS AND DRY LINING OR CHASED INTO MASONRY WALLS IF NECESSARY. INTUMESCENT FIRE PADS TO BE FIXED TO THE REAR OF BACK BOXES RECESSED IN STUD PARTITIONS – THE INTEGRITY OF THE FIRE RATED PARTITIONS MUST BE MAINTAINED.
6. OUTLETS AND FIXINGS MOUNTED IN DADO TRUNKING SHALL BE OF A RANGE RECOMMENDED FOR THE TRUNKING.
7. ALL ELECTRICAL DISTRIBUTION BOARDS SHALL BE LOCKABLE.
8. ALL DATA POINTS SHALL BE WIRED IN CAT 6A CABLING BACK TO THE ADJACENT MOST ICT DISTRIBUTION FRAME.
9. THE ELECTRICAL CONTRACTOR SHALL ALLOW FOR ALL WIFI ACCESS POINTS SHOWN AND FOR 2No. CAT 6A CABLES FROM EACH BACK TO THE ADJACENT MOST ICT DISTRIBUTION FRAME.
10. ALL GENERAL SERVICES & SMALL POWER CIRCUITS SHALL BE PROTECTED BY AN RCBO.
11. SUB-CIRCUIT CABLING SHALL GENERALLY BE N2XH-J/LSF CARRIED IN GALVANISED STEEL CONTAINMENT THROUGHOUT. PRIMARY CONTAINMENT SHALL GENERALLY BE SUITABLY SIZED GALVANISED STEEL CABLE TRAY. SECONDARY CONTAINMENT SHALL GENERALLY BE 25ø GALVANISED STEEL CONDUIT UNLESS INDICATED OTHERWISE.
12. THERE SHALL BE A MAXIMUM OF 6No. SINGLE OR TWIN SOCKET OUTLETS PER CIRCUIT WITH EACH CIRCUIT PROTECTED BY AN RCBO.
13. ANY SINGLE PHASE CIRCUIT FED DIRECTLY FROM A THREE PHASE DISTRIBUTION BOARD SHALL HAVE THE APPROPRIATE PHASE COLOUR EXTENDED INTO THE SINGLE PHASE CIRCUITS FED FROM THAT PHASE.
14. REFER TO TABLE 51C COLOUR CODE FOR CABLE CORES AND INSULATED CONDUCTORS OF AMENDMENT NO. 2 ET101:2004/A2:2005 OF THE NATIONAL RULES FOR ELECTRICAL INSTALLATIONS.
15. THE ELECTRICAL CONTRACTOR SHALL ENSURE THAT THE CIRCUITS ARE DISTRIBUTED EVENLY OVER THE PHASES.
16. THE ELECTRICAL CONTRACTOR SHALL ALLOW FOR ALL WIRING BETWEEN THE OUTDOOR AND INDOOR AIR CONDITIONING UNITS IN ACCORDANCE WITH THE MANUFACTURERS INSTALLATION MANUALS & GUIDELINES.
17. THE ELECTRICAL CONTRACTOR SHALL ALLOW FOR EQUIPOTENTIAL BONDING INCLUDING THE "I" BARS IN THE SUSPENDED CEILINGS – ALL TO COMPLY WITH CURRENT ETCI REGULATIONS
18. ALL NEW SWITCHES, OUTLETS AND CONTROLS SHALL BE TGD PART 'M' COMPLIANT. FRONT PLATES OF ALL SHALL BE VISUALLY CONTRASTING WITH BACKGROUND.
19. THE MAXIMUM HEIGHT TO THE TOP OF DISTRIBUTION BOARDS SHALL BE 2050mm AFFL.

DOOR ACCESS NOTES:

1. BATTERY BACK-UP POWER SHALL BE PROVIDED FOR DOORS WITH ACCESS CONTROL.
2. THE ELECTRICAL CONTRACTOR SHALL ALLOW FOR POWER SUPPLIES & ELECTRICAL CONNECTIONS TO ALL DOOR ACCESS ITEMS IDENTIFIED.
3. FINAL DOOR ACCESS CONTROL STRATEGY TO BE AGREED WITH THE CLIENTS REPRESENTATIVE BEFORE COMMENCING WORKS.
4. FINAL CABLING SELECTIONS AND WIRING DETAILS SHALL BE AS PER DOOR ACCESS SYSTEM MANUFACTURERS REQUIREMENTS.

Revision	Description	Date	Drawn	Checked
1	Construction Issue	May 2026	RJM	CG
0	Construction Issue	April 2024	RJM	CG

GEANEY ENGINEERING CONSULTANTS
STUDIO 22, WATERFORD BUSINESS PARK, CORK ROAD, WATERFORD, IRELAND.
TEL: 051-879371
FAX: 051-853188
EMAIL: info@geaneyengineering.ie

project title:
Dunhill Eco Centre
Proposed Offices
Dunhill, Co. Waterford

drawing title:
General Services & Small Power Layout
Ground Floor

architect: The E Project Charted Architects

scale: 1:50 @ A3

drawing number: EL2

project number: 0595